Sensors & Transducers, Vol. 164, Issue 2, February 2014, pp. 36-43

Sensors & Transducers

A Circuit Design and its Experimental Analysis for Electromagnetic Flowmeter in Measurement of Sewage

[1] Huang Yu-Hang, [2] Zhu Wei-Hua, [3] Jiang Xingfang
[1] Changzhou Vocational College of Information Technology,
Changzhou, 213164, China
[2] Government procurement center of Changzhou,
Changzhou, 213001, China
[3] Research Institute of Photoelectric Technology, Changzhou University,
Changzhou, 213164, China
[1] Tel.: 13616122808
[1] E-mail: weehouse6611@eyou.com

Received: 18 November 2013 /Accepted: 28 January 2014 /Published: 28 February 2014

Abstract: There are many problems in the traditional electromagnetic flowmeter. The problems involve three aspects. The first one is that the measurement precision is low. The second one is that the measurement range is narrow. The third one is that the test results are susceptible to interference. For the problems a new electromagnetic flowmeter controlled by single-chip microcomputer has been proposed. The medium/large-sized electromagnetic flowmeter is suitable for measurement of sewage. The software and hardware circuit of the electromagnetic flowmeter has been designed and tested. The tested data have been analyzed by the least square method and the error is 0.8 %. The result shown that the electromagnetic flowmeter controlled by single-chip microcomputer for measurement of sewage has reached the advanced level of similar products at home and abroad. *Copyright © 2014 IFSA Publishing, S. L.*

Keywords: Electromagnetic flowmeter, Designing scheme, Testing method, Result analysis.

1. Introduction

In recent years, the measurement problems in the discharge flow of water and sewage induce the people's attention with the electromagnetic flowmeters having been rapidly applied in the industrial field. The electromagnetic flowmeter has been applied to the flow medium of water and slurry. Some shortcomings in measurement have been exposed at the same time such as the manufacturing cost is high, the measurement accuracy is low, the measurement range is narrow, and the transmission signal is disturbed susceptible to external magnetic field [1-3].

For these problems, a circuit of the electromagnetic flowmeter for measuring the discharge flow of water and sewage in large diameter has been developed. It is controlled by new MCU circuit in the electromagnetic flowmeter. It has many functions such as real-time detection and timely display. The performance and technical indicators of the electromagnetic flowmeter have reached the advanced level of similar products at home and abroad after the trial of many enterprises.

2. Design Scheme

2.1. Design Ideas

The design purpose of the electromagnetic flowmeter is to measure the discharge flow velocity of water and sewage in straight pipe and the diameter is less than 100 inch. The requirement of the probe is streamlined, compact and flexible, and easy to install. It is regarded approximately as free flow state because the effects of fluid when the probe into is very small.

2.2. The Principle of Electromagnetic Flowmeter

The electromagnetic flowmeter is based on the law of electromagnetic induction. The induced electromotive force was generated when the conductive fluid flows through the electromagnetic flowmeter in the magnetic field. The induced electromotive force is proportional to the average flow velocity in the vertical direction of the velocity and the magnetic field [4].

As shown in Fig. 1, the direction of the magnetic induction intensity B produced by a pair of the excitation coil is upward.

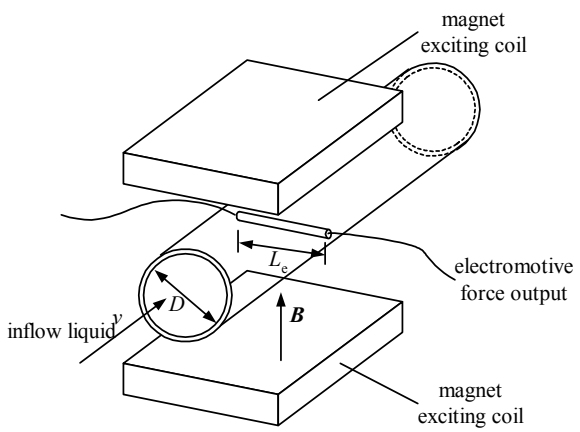

Fig. 1. The principle diagram of the electromagnetic flowmeter.

The liquid velocity is v, the diameter of the pipe is D, and the distance between dipolar is L_e. The electromotive force is proportional to the magnetic induction intensity B, the liquid velocity v, and the distance L_e.

$$\varepsilon = kBvL_e, \tag{1}$$

where k is the proportional coefficient.

The relationship between flow Q_v and the diameter D of the pipe is as equation (2):

$$Q_v = \frac{\pi D^2}{4} v, \tag{2}$$

The flow Q_v is as equation (3).

$$Q_v = \frac{\pi D^2}{4kL_e}\frac{\varepsilon}{B} = K\frac{\varepsilon}{B}, \tag{3}$$

where k is the constant and relates the tube diameter D, the distance L_e.

The induced electromotive force is not affected by the changes of the temperature, pressure, density, conductivity for the fluid. The conductivity is larger than a certain threshold. The electromagnetic flowmeter has a strong advantage and wide applicability in various types of flowmeter.

2.3. The Part of Hardware in System Circuit

2.3.1. The Block Diagram

The most impartment module of the electromagnetic flowmeter [5] is a CPU module (STM32F407). The CPU module includes the excitation pulse signal of square wave, the voltage signal received from the probe and reflected the flow size, and output 4~20 mA current signal for analog display instrument. The CPU module is with various interface circuit (RS232, high-speed USB interface), keyboard and display interface circuit. The block diagram of the CPU module includes IC1 microcontroller, IC2 preamplifier, IC3 A/D converter, IC4 voltage to current module, IC5 module circuit of excitation coil driving, IC6 voltage conversion module, USB fast interface circuit, IC9 chip and RS232 interface circuit formed by peripheral components as shown in Fig. 2.

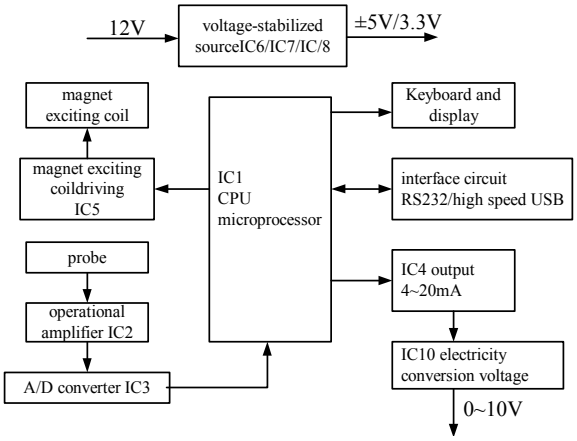

Fig. 2. Schematic block diagram.

2.3.2. Sensor

The less is for the size of the probe of the sensor; the better of the accuracy of measurement is in the design requirements. It is regarded approximately as free flow state for the probe is very small [6]. The

probe shell is made with the stainless steel and the thickness is 1 inch. The soft magnetic iron core is as excitation coil core and the wire diameter is 0.07 mm. The coil is sealed in a plastic shell with high strength and the plastic shell is streamlined hemisphere. There is a pair of stainless steel electrode over the plastic shell and the stainless steel electrode is connected with the excitation coil. In order to avoid the interference caused by the probe induced emission signal, the parts of the signal transmission wire, the coil, and the electrode connection will be separated shielding.

2.3.3. Single Chip Microcomputer Control Circuit

One of the single chip microcomputer control circuit of IC1 (STM32F407) is adopted the advanced Cortex-M4 kernel. The arithmetic ability of floating-point is strong and the running speed is high. The DSP processing instruction with more storage space (on-chip flash memory is 1 M and the embedded SRAM is 196 K) is strong. There is a flexible external memory interface FSMC with a variety of peripheral interface such as the interface of camera, the USB interface of high speed, the faster communication interface, and the sensor interface of temperature). The tasks of the FFT, all kinds of filtering, signal compression and recognition can be completed in internal single chip microcomputer control circuit.

It has the ability of parallel processing for multiple input buses and receives the signals from the Ethernet, high speed USB, and two general DMA. It sends output audio signals at the same time and drives the liquid crystal display. The power consumption is ultra low for the designed chip circuit. The power consumption is only 38.6 mA when the frequency is 168 MHz.

2.3.4. Special Circuit Design

1) The excitation signal and the driving circuit.

The size of the probe is as small as possible in order to ensure that the working probe is as free flow state. The problem is that the excitation current produced in coil is small.

For solving the problem it requires the enough high input impedance in receiving circuit to ensure the sensitivity of the sensor and to resist the interference. In order to prevent the interference of AC 50 Hz the square wave current as the excitation current has been selected. It selects that the frequency is 12.5 Hz and it is 1/4 of the working frequency. The interference of the working frequency has been controlled effectively.

The excitation signal generated by the MCU internal and the square wave signal of 12.5 Hz is from the twenty-sixth feet. The received signal is from the third feet of IC5 (LMD18200T). The driving circuit module of the excitation coil is based on the internal use of *H* bridge driver and sends the excitation current to the excitation coil between its second feet and the tenth feet. The square wave current in excitation coil *L* has been formed and it is symmetrical. The current is 20~30 mA and it is synchronous to control the square wave voltage. In this way, the square wave voltage generated by the fluid motion cutting magnetic force lines is synchronous to the excitation current. It is said that the square wave voltage is synchronous to square wave voltage for controlling switch network and for synchronous demodulation of signal at the receiving circuit as shown in Fig. 3.

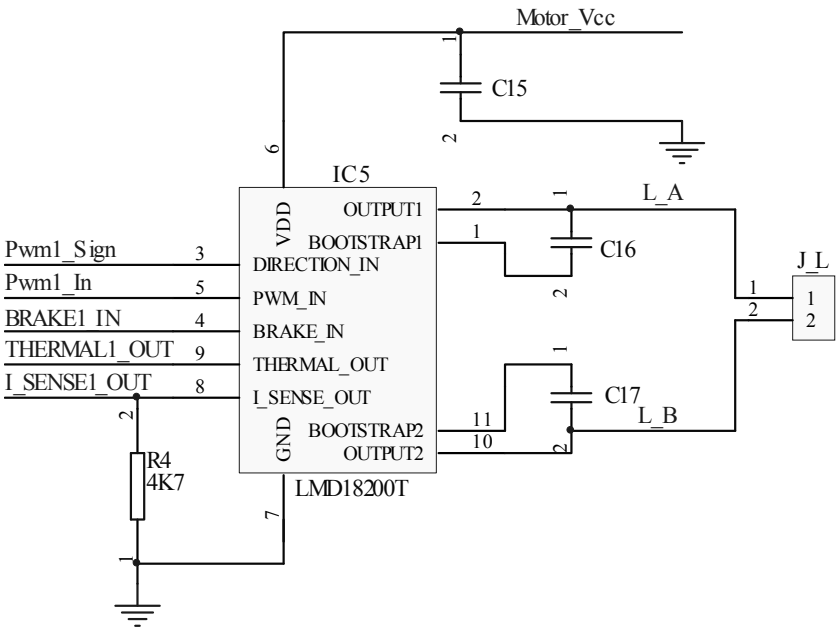

Fig. 3. The circuit of the excitation coil driver module.

2) The amplifier circuit of the sensor.

The preamplifier for amplification of IC2 (SL28617) is used to amplification the voltage signals which reflects the flow magnitude. The gain can be changed when the resistances of R_{in} and R_{fb} have been changed. The excitation signal source is S_1. The resistances of R_{17} and R_{18} are the input bias resistor. The voltages of ±5 V are provided by the ninth feet and the sixteenth feet of the amplifier respectively. The output end of IC3 (ADS8320) which links the operational amplifier IC2 is high speed A/D converter with 16 bits and the switching speed is up to 16 kHz/s. The component of IC12 (ISL21090) which is between the preamplifier and A/D converter IC12 (ISL21090) is a three terminal regulator as shown in Fig. 4.

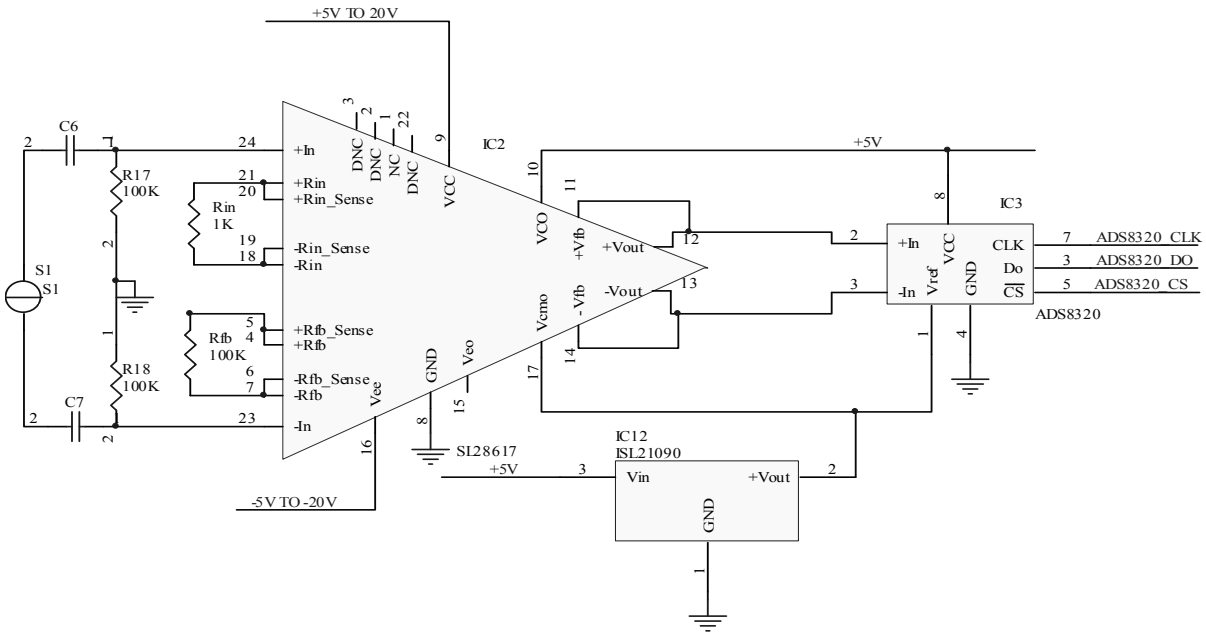

Fig. 4. The amplifier circuit of the sensor.

3) The module circuit for the voltage to the current.

The component of IC4 (AD420) is a module of voltage to current. The voltage signal can be conversed into a current signal for output and the range of the output current is 4~20 mA or 0~20 mA. The component of IC10 (LM358) which connected with the output end is the operational amplifier and the output current is converted into output voltage. The range of the output voltage is 0~10 V as shown in Fig. 5.

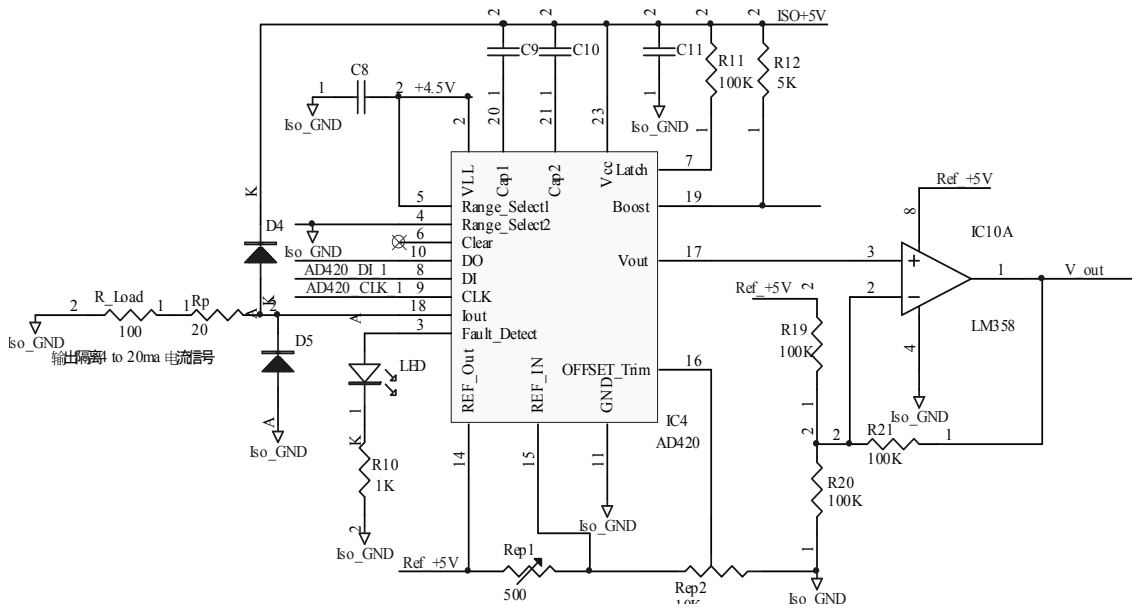

Fig. 5. The module circuit for the voltage to the current circuit of RS232.

4) The interface of USB with high speed and the interface circuit of RS232.

The circuit is composed of Q_1, R_{14}, R_{15}, R_{16}, L_3, D_3, R_8 and R_9. The corresponding circuit of MCU builds the interface circuit of USB with high speed. The chip of IC9 (SP3232EEY) and the peripheral component build the interface circuit of RS232 as shown in Fig. 6.

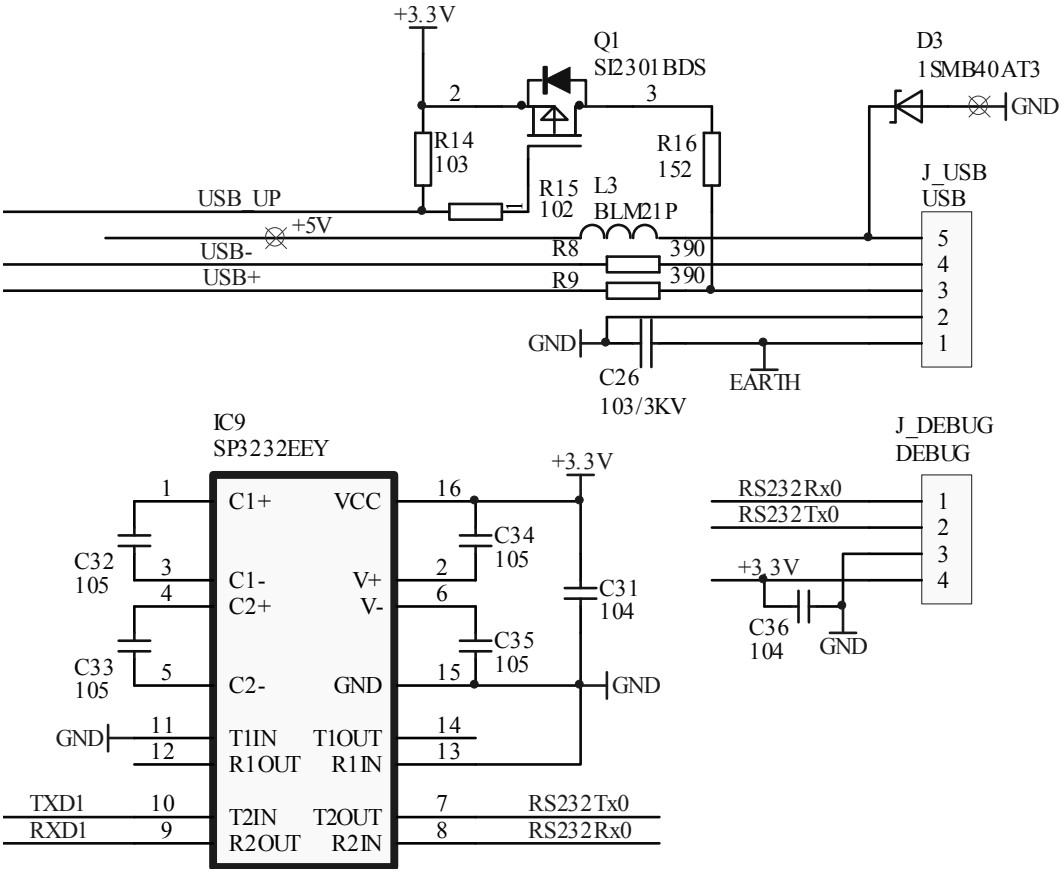

Fig. 6. The interface of USB with high speed and the interface

2.4. Software

The flow diagram is shown in Fig. 7. The first step is to initialize the system in the process of the preparation of electromagnetic flow software. The second step is to initialize the CPU for controlling LM8200 and driving excitation coil by excitation current through excitation pulse of the CPU and exportation of square wave signal. The voltage signal is sent by the sensor after it receives the signal and the voltage signal reflects the flow size. The signal is enlarged by preamplifier of IC2 and is handled by 16 bit A/D converter and SPI serial single-chip microcomputer. The processing includes the real-time sampling, the real-time filtering, the data connection, and the data transfer. The last step is that the signal is conversed by IC4 into the output current signal or the output voltage.

There are two conditions must be ensured in the process of acquisition data in the electromagnetic flowmeter. The two conditions are that the collection of the data is real-time and the storage of the data is correct. The collection of the data is finished by A/D conversion. The collected data is stored in RAM of the single chip microcomputer for filtering. The method is ensured real-time in the single chip microcomputer, the interrupt is finished by A/D conversion, and the collected data is stored in the buffer. At the same time the completed interrupt must be set to senior for A/D conversion. The data filtering of real-time is realized in the main program. The data filtering is droved when the length of collected data reaches a window length. It waits passively the next acquisition window data when the step of the data filtering has finished. The filtered data must be timely stitching and storage. The results are that the memory resources of the single chip microcomputer are saves and the efficiency of serial transmission can be improved.

2.5. The Important Points of the Circuit Hardware Design

1) It has a powerful capability of floating-point arithmetic and a high velocity of running because it uses the single chip microcomputer of STM32F407 in hardware. The receiving sensitivity of the machine

is higher and the work requirements are stable. It has more storage space and a variety of interface circuit of peripherals. The circuit is ensured the software reliable operation because the varying measures such as watchdog circuit and the software trap are took in software.

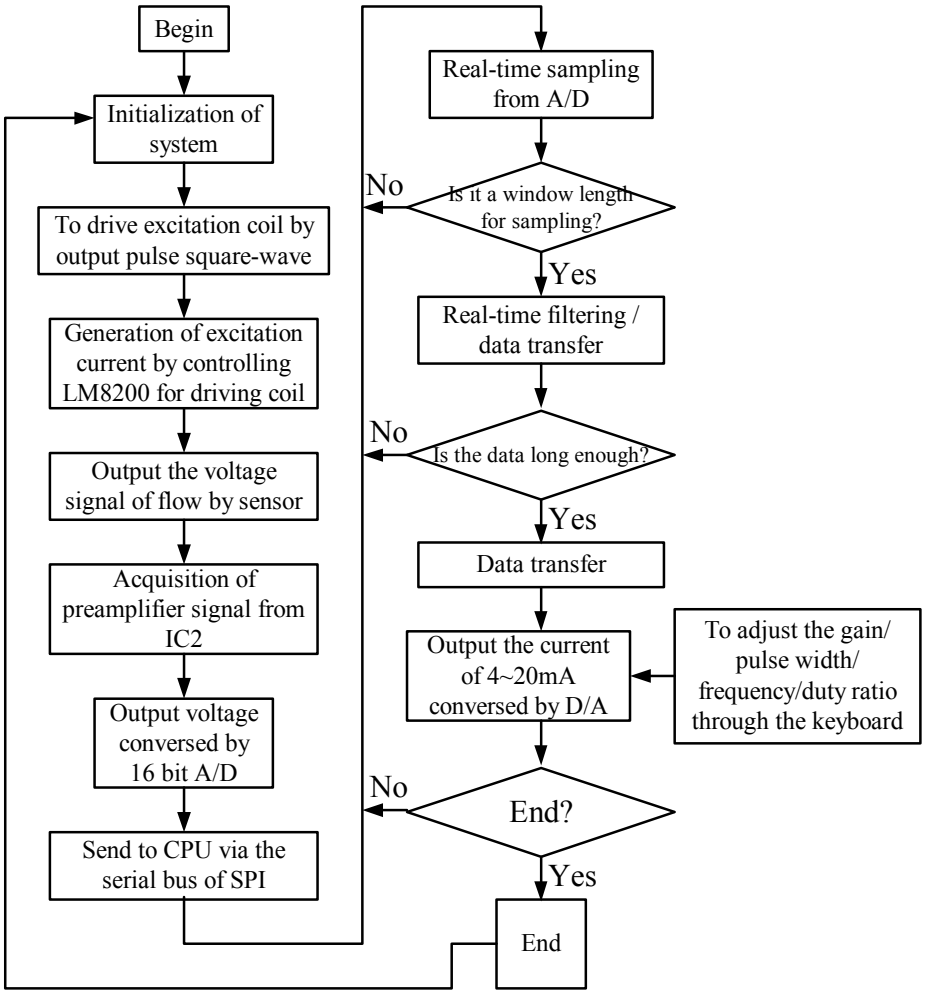

Fig. 7. The flowchart of software programming.

2) The related measures such as the electro-magnetic shielding are introduced. It forms the system of independent wiring of the analog signal circuit and the digital signal circuit. The discrete components outside of the module are surface patch elements for reducing the lead effect of distributed parameters. A variety of measures such as the respective ground handles separately for the simulation signal and the digital signal, the high frequency signals and the low frequency signals are took for reducing the interference.

3) It uses respectively shielding for the leads and coil of the signal emission, the lead and electrode of the signal reception in order to avoid the interference caused by the emission signal in the probe when the resistance and the capacitance are coupled to the receiver. The transmission line can choose as the shielding line with high quality low frequency.

3. The Measuring Method and the Result Analysis

3.1. The Flow Velocity of v_{OP} and the Flow of Q_v

It looks for the flow velocity of v_{OP} and the flow of Q_v for the measuring point when the environment is in the turbulent state. The coefficient is determined by the method of the regulated water tower and the method of volume and time. The chose test environment is very important. The idea measuring condition is that we choose the inner radius is R=50 mm for a plastic pipe or a metal straight pipe with smooth inner wall, the probe is put into the diameter of 1/4, R_x=25 mm, the corresponding

Reynolds number is n = 7 for the fluid, and the state is close to the turbulence production conditions.

1) The method of the regulated water tower and the method of volume and time.

The mean velocity is $\bar{v} = 0.816 v_{\max}$ by the empirical formula. Here $v_{\max}$ is the maximum velocity for the fluid in the measured point. The flow velocity is $v_{\mathrm{OP}} = \sqrt[n]{1 - \frac{R_x}{R}}\, v_{\max}$ in the measured point. Here there are R=50 mm, R_x=25 mm, n=7. The physical quantity of $\bar{v}$ is measured by the method of volume and time.

2) Flow velocity.

The flow velocity of $v_{\mathrm{OP}} = 1.12\bar{v}$ is obtained by the mean velocity.

3) The distribution coefficient.

The distribution coefficient is $\alpha = \frac{\bar{v}}{v_{\mathrm{OP}}}$ and $\alpha = \frac{1}{1.12}$.

4) Flow.

The flow is $Q_v = \alpha\, v_{\mathrm{OP}} S = \bar{v} S$ and the unit is m^3/s. The symbol of S is the cross-sectional area of the pipe.

5) List table.

The relation between the calculated value v_{OP} of the Insertion Electromagnetic Flowmeter sample and the testing voltage value U_{o} of the instrument is shown in Table 1.

6) The coefficients of β and c.

The coefficients of β and c are determined by the equation of binary linear regression $v_{\mathrm{OP}} = \beta U_{\mathrm{o}} + c$ in Table 1. The comparison table of linear regression coefficient is shown in Table 2.

The value of c is too small and it is neglected because the average value of $\bar{\beta} = 1.126\,025\,8$, $\bar{c} = -0.006\,556\,2$. Then

$$v_{\mathrm{OP}} = 1.126\,025\,8 U_{\mathrm{o}}, \tag{4}$$

There is the simple linear relationship between the velocity and the output voltage U_{o} of the instrument for estimating. The flow velocity v_{OP} can be read in software when the parameter β is multiplexing a coefficient.

The errors between the readout value and the theoretical value for the measuring velocity are shown in Table 3. The results show that the errors are very small and it is in the range of a few thousands.

Table 1. The data table of the Insertion Electromagnetic Flowmeter sample.

Number	Mean velocity $\bar{v}$ /m·s^{-1}	Flow velocity v_{OP} / m·s^{-1}	Flow Q_v /m^3·h	Output voltage U_{o} /V
1	0.25	0.28	7.065	0.251
2	0.66	0.74	18.65	0.658
3	1.32	1.48	37.30	1.311
4	2.11	2.36	59.63	2.099
5	3.59	4.02	101.45	3.576

Table 2. The comparison table of linear regression coefficient.

Number of comparison	β	c
The first and the second	1.1302211	0.0036855
The second and the third	1.1332312	0.0056661
The third and the fourth	1.1167513	0.0159391
The fourth and the fifth	1.1238997	0.0009343
Mean	1.1260258	0.0065562

Table 3. The comparison table between the readout value and the theoretical value.

The readout value v_{OP} / m·s^{-1}	The theoretical value v_{OP} / m·s^{-1}	Errors E_{r} %
0.2826	0.28	0.0026
0.7409	0.74	0.0009
1.4762	1.48	-0.004
2.3635	2.36	0.0035
4.0266	4.02	0.0066

3.2. The Surface Flow Velocity $\bar{v}$

It looks for the surface average velocity $\bar{v}$ when the environment is not ideal state of the turbulent flow. The fitting equation of quadratic regression is used for describing the surface average velocity $\bar{v} = k_1 v_{OP} + k_2 v_{OP}^2$ when it is near the elbow or the valves. Here the coefficients of k_1, k_2 are measured by the field data. The linear equation is transformed based on the nonlinear equation of two order regression equation

$$\frac{\bar{v}}{v_{OP}} = k_1 + k_2 v_{OP} ,$$

It takes $y = \frac{\bar{v}}{v_{OP}}$ and $x = v_{OP}$, then

$$y = k_1 + k_2 x , \quad (5)$$

The flow velocities of the different radius are measured and the velocity profile can be finished when the every stable state of flow velocity is chosen in the test. The surface mean flow velocity is obtained by the method of area weighted. The coefficients of k_1, k_2 are measured by the equation of binary linear regression based on the flow velocity v_{OP} and surface mean flow velocity $\bar{v}$. Finally, surface mean flow velocity $\bar{v}$ can be obtained from the determined the coefficients of k_1, k_2 in software.

4. Conclusion

The proposed circuit of the electromagnetic flowmeter has extensive practical value. The electromagnetic flowmeter is intelligent flowmeter with the single chip microcomputer control circuit of IC1 (STM32F407). The problems met in test have been solved. It is examined for the iron pipe with the diameter being 100 mm or the plastic pipe of PVC after full investigation and referring the technical performance of similar products at home and abroad. The mean flow velocity has been obtained by the measure data of flow velocity in different states with point-by-point distribution. The coefficients of regression equation are obtained by computer simulation. The value of the flow in different states is obtained. The test results show that the range of flow is 0~120 m³/h and the nonlinear error is 0.8 %. The electromagnetic flowmeter with the single chip microcomputer control circuit for sewage has reached the advanced level of the similar products at home and abroad in the performance indicators.

Acknowledgments

This work is supported by Open Issues of the State Key laboratory of Satellite Ocean Environment Dynamics (No. SOED1201).

References

[1]. Li Xiaojing, The design of the amplification filter circuit for electromagnetic flowmeter, *Control and Instruments in Chemical Industry*, Vol. 27, Issue 2, 2000, pp. 50-52.

[2]. Xu Lijun, Wang Ya, Qiao Xutong, et al., Design of electrode array of multi-electrode electromagnetic flowmeter, *Chinese Journal of Scientific Instrument*, Vol. 24, Issue 4, 2003, pp. 335-339.

[3]. Yang Shuanglong, Wang Gang, Xu Kejun, et al., Linear regulator based single/dual frequency excitation control system for electromagnetic flowmeter, *Journal of Electronic Measurement and Instrument*, Vol. 24, Issue 2, 2010, pp. 147-152.

[4]. Cai Wuchang, On-line verification of electromagnetic flowmeter and ultrasonic flowmeter, *Process Automation Instrumentation*, Vol. 28, Issue 4, 2007, pp. 1-4.

[5]. Huang Yuhang, The introduction of design proposal of electron emergency vehicle orders used in new type ship, *Control & Automation*, Vol. 3, Issue 2, 2007, pp. 296-297.

[6]. Cao Jinliang, Li Bin, Study on methods of empty pipe detection for electromagnetic flowmeter, *Chinese Journal of Scientific Instrument*, Vol. 6, 2006, pp. 643-647.